Dixell EMERSON

iCHiLL

QUICK REFERENCE GUIDE

IC200D (v. 1.0)

INDEX

1. GENERAL WARNING 5

1.1 ⚠ Please read before using this manual 5

1.2 ⚠ Safety Precautions 5

1.3 PRODUCT DISPOSAL (WEEE) 6

2. USING THE QUICK REFERENCE GUIDE 6

3. IC200 D TABLE OF THE FEATURES 7

4. USER INTERFACE 8

4.1 MEANING OF THE LEDS 8

4.2 DISPLAY AND ICONS 8

5. DISPLAY LAYOUT 10

6. OTHER DISPLAY INFORMATION 10

6.1 READ THE SET POINT VALUE 10

6.2 MODIFY THE SET POINT 11

7. KEY FUNCTION 11

7.1 KEY COMBINANTION 12

8. FIRST INSTALLING 12

8.1 ON BOARD CLOCK (OPTIONAL) 12

8.2 RTC Setup 13

9. PARAMETERS PROGRAMMING WITH THE "HOT KEY 64" 13

9.1 HOW TO PROGRAM AN INSTRUMENT WITH AN ALREADY PROGRAMMED "HOT KEY" (DOWNLOAD) 13

9.2 HOW TO COPY THE PARAMETER MAP INTO THE "HOT KEY" (UPLOAD) 13

10. PROGRAMMING USING THE KEYBOARD 14

10.1 ENTER THE PROGRAMMING LEVEL PR1 14

10.2 ENTER THE PROGRAMMING LEVEL PR2 14

10.3 ENTER THE PROGRAMMING LEVEL PR3 14

11. MENU (MENU KEY)..... 15

11.1 ALARM LIST: READ AND RESET 16

11.2 ALARM LOG LIST 16

12. REMOTE KEYBOARD VI622 AND TI620 17

13. REMOTE KEYBOARD V2I820 17

13.1 PROBES VISUALIZATION 19

13.2 SET POINT VISUALIZATION / MODIFICATION 20

13.3 ALARM VISUALIZATION 20

14. TABLE OF THE OUTPUT STATUS IN ALARM CONDITION 21

14.1 ALARM: “A” TYPE AND STATUS OF THE LOADS IN CASE OF ALARM 21

14.2 ALARM: “B” TYPE AND STATUS OF THE LOADS IN CASE OF ALARM 24

14.3 ALARM: “C” TYPE AND STATUS OF THE LOADS IN CASE OF ALARM 25

14.4 WARNING 25

15. BLACK-OUT 25

16. WIRING CONNECTIONS 26

16.1 IC205D CONNECTIONS 26

16.2 207D CONNECTIONS 27

16.3 REMOTE KEYBOARD CONNECTION 28

16.4 Analog Inputs NTC – PTC Probes 30

16.5 digital inputs 31

16.6 Analog Input for Pressure Transducer (4 ÷ 20mA signal)..... 32

16.7 Analog Input for Pressure Ratiometric Transducer Ppr30 (0 ÷ 5V signal) 33

16.8 PWM Output for Condensing Fan Speed Control (only for OUT2 and OUT3) 34

16.9 Proportional Output For Fan Condensing Control or FOr Compressor Inverter Controlled or For Auxiliary Outputs..... 35

16.10 proportional output 0..10v to control dumper motors..... 36

16.11 Proportional outputs configured for aux relay control..... 38

17. INSTALLING AND MOUNTING 39

17.1 MECHANICAL DIMENSIONS..... 39

17.2 VI622 PANEL CUT-OUT 40

17.3 TI620 PANEL CUT-OUT 41

17.4 V2I820 PANEL CUT-OUT 42

18. TECHNICAL SPECIFICATIONS 42

18.1 SUPPLY VOLTAGE 42

18.2 ANALOGUE INPUTS 42

18.3 DIGITAL INPUT..... 43

18.4 ANALOGUE OUTPUTS..... 43

18.5 DIGITAL OUTPUTS 43

18.6 operating and storage temperature 44

1. GENERAL WARNING

1.1 ⚠ PLEASE READ BEFORE USING THIS MANUAL

- This manual is part of the product and should be kept near the instrument for easy and quick reference.
- The instrument shall not be used for purposes different from those described hereunder. It cannot be used as a safety device.
- Check the application limits before proceeding.
- Dixell Srl reserves the right to change the composition of its products, even without notice, ensuring the same and unchanged functionality.

1.2 ⚠ SAFETY PRECAUTIONS

- Check the supply voltage is correct before connecting the instrument.
- Do not expose to water or moisture: use the controller only within the operating limits avoiding sudden temperature changes with high atmospheric humidity to prevent formation of condensation
- Warning: disconnect all electrical connections before any kind of maintenance.
- The instrument must not be opened.
- In case of failure or faulty operation send the instrument back to the distributor or to “Dixell S.r.l.” (See address) with a detailed description of the fault.
- Consider the maximum current which can be applied to each relay (see Technical Data).
- Separate the signal cables from the power cables in order to prevent malfunction due to electromagnetic interference; do not use the same electrical conduit to install high voltage cabling and low voltage cabling.
- The ground connection of the secondary coil of the transformer that powers the device can result in a bad performance; where possible, this connection should be avoided.
- Fit the probe where it is not accessible by the end user.
- In case of applications in industrial environments, the use of mains filters (our mod. FT1) in parallel with inductive loads could be useful.
- The symbol alerts the user of non-insulated “dangerous voltage” within the product area that is sufficiently high to constitute a risk of electric shock to persons.
- The symbol alerts the user of important operating and maintenance (assistance) instructions found in the documentation attached to the device.

1.3 PRODUCT DISPOSAL (WEEE)

With reference to Directive 2002/96/EC of the European Parliament and of the Council of 27 January 2003 and to the relative national legislation, please note that:

- There lies the obligation not to dispose of electrical and electronic waste as municipal waste but to separate the waste.
- Public or private collection points must be used to dispose of the goods in accordance with local laws. Furthermore, at the end of the product's life, it is also possible to return this to the retailer when a new purchase is made.
- This equipment may contain hazardous substances. Improper use or incorrect disposal can have adverse effects on human health and the environment.
- The symbol shown on the product or the package indicates that the product has been placed on the market after 13 August 2005 and must be disposed of as separated waste.
- Should the product be disposed of incorrectly, sanctions may be applied as stipulated in applicable local regulations regarding waste disposal.

2. USING THE QUICK REFERENCE GUIDE

In this guide, there are some general guidelines regarding the product; more details are in the full manual, to be requested from the Dixell Customer Service department.

3. IC200 D TABLE OF THE FEATURES

FEATURES	IC205D	IC207D
OUTPUT RELAYS		
5	●	
7		●
DIGITAL INPUTS		
9 (free voltage)	configurable	configurable
PROBE INPUTS		
4 (NTC/PTC)	configurable	configurable
3 (NTC/PTC/0..5V/4..20mA)	configurable	configurable
PROPORTIONAL OUTPUTS		
2 0÷10V or PWM outputs	configurable	configurable
1 0÷10V	configurable	configurable
OTHER OUTPUTS		
TTL	●	●
Output for remote keyboard	●	●
LAN	●	●
POWER SUPPLY		
12 Vac/dc (+15%;-10%)	●	●
24 Vac/dc (± 10%)	opt	opt
OTHERS		
Internal real time clock	opt	opt
Buzzer	opt	opt

- Opt = optional
- ● = default

4. USER INTERFACE

4.1 MEANING OF THE LEDS

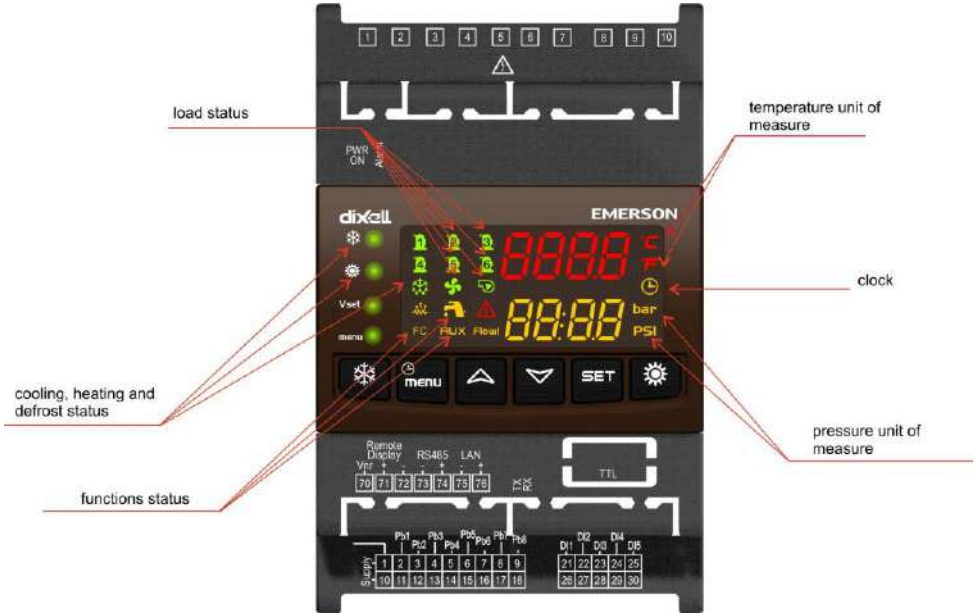

4.2 DISPLAY AND ICONS

ICON	MEANING / FUNCTIONNING
°C °F BAR PSI	Lighted when the display shows a temperature or pressure
	Lighted when the bottom display shows the clock Lighted during the programming parameters if it is time based Lighted in function menu when the display shows the defrost delay

	Alarm: blinking in case of alarm
	Lighted when domestic hot water function is active
menu	Lighted after pressing menu button
	Lighted if anti freeze heaters/ integration heating / boiler are activated
Flow!	Flow switch alarm / supply fan overload (air / air unit)
	Water pump: lighted if at least one pump is ON
	Condenser fan: lighted if at least one fan is ON
1 2 3 4 5 6	Lighted when a compressor is ON Blinking = when the delay of activation is running
AUX	Lighted when auxiliary function is active
	Lighted when the controller is ON in cooling or heating
FC	Lighted when the Free cooling is active
	Lighted when the defrost is activated Blinking when the delay to activate the defrost is active

5. DISPLAY LAYOUT

Pressing Up or Down button the display shows the temperature or pressure of the main probes configured in the instrument.
The lower display shows the label of the selected probe while the upper display shows its value.
If the machine is configured with two gas circuits, when on the display is visualized the condenser pressure/temperature or evaporation pressure of circuit 1, pressing SET button the display shows condenser pressure/temperature or evaporation pressure of circuit 2.

Fig.1

Fig.2

6. OTHER DISPLAY INFORMATION

6.1 READ THE SET POINT VALUE

Press and release the SET key:
If the unit is on standby:

- lower display shows SEtC (set chiller);
- press SET key again, lower display shows SEtH (set heat pump, if it is enabled);
- press SET key again, lower display shows SEtr (set real of operation, in the case where the Energy Saving and / or function dynamic set point are active);
- press SET key again, lower display shows SEtS (set domestic water circuit, in case it is enabled)

If the instrument is in chiller operation:

- lower display shows SEtC (set chiller);
- press SET key again, lower display shows SEtr (set real of operation, in the case where the Energy Saving and / or function dynamic set point are active);
- press SET key again, lower display shows SEtS (set domestic water circuit, in case it is enabled)

If the instrument is in chiller operation:

- lower display shows SetH (set heat pump);
- press SET key again, lower display shows SEtr (set real of operation, in the case where the Energy Saving and / or function dynamic set point are active);
- press SET key again, lower display shows SEtS (set domestic water circuit, in case it is enabled)

6.2 MODIFY THE SET POINT

- push **SET** key for at least **3** seconds
- use the **UP** or **DOWN** key to modify the setpoint. In chiller it is possible to modify the chiller set point, in heat pump it is possible to modify the heat pump set point, in std-by it is possible to modify both the set point.
- push **SET** to confirm or wait the timeout (15seconds).

7. KEY FUNCTION

KEY	ACTION	FUNCTION
SET	Push and release	Show chiller set point **SetC,** heat pump set point **SetH,** sanitay water set point **SetS**
	Push once again	In chiller or heat pump if the Energy saving or the Dynamic setpoint are enabled it shows the real setpoint **Setr.**
	Push for 3 seconds	Set point modification
	During the programming: push once	To enter parameter modification or confirm a value
	Push when an alarm is showed in menù ALrM	To reset the alarm
	Push once with probe label showed on the bottom display (press up or down starting from default visualization)	To read probes values of circuit 1 or circuit 2
	Push once	To read probes value
	Pushing once during the programming	To change the group of parameters, to change the parameter, to change the value of the parameter
	Push for 1 second during the programming when the display visualize Pr1 or Pr2 or Pr3	1 time shows the Pr2 programming level 2 times shows the Pr3 programming level
	Push once	To read probes value
	Pushing once during the programming	To change the group of parameters, to change the parameter, to change the value of the parameter
	Push once	To turn ON or turn OFF the controller (in chiller or heat pump depending from CF58 parameter)

	Push once	To turn ON or turn OFF the controller (in chiller or heat pump depending from CF58 parameter)
	Push once	To enter the function Menu
	Push for 3 seconds	To set the clock (controller with clock on board)
	Pushing once during the programming	To exit from a group of parameter

7.1 KEY COMBINANTION

KEY	ACTION	FUNCTION
SET +	Push for 3 seconds together	Enter the programming parameters
	Only in Pr3 level: push SET and DOWN key	Select the parameter level visibility Pr1 / Pr2 / Pr3
SET +	Push once together	Exit the programming parameters
	Push 5 seconds in heat pump mode	Manual defrost
SET + menu	Only in Pr3 programming level: push SET and then the MENU key	In Pr3 defines if the parameter can be modified or not in the other levels.

8. FIRST INSTALLING

8.1 ON BOARD CLOCK (OPTIONAL)

If giving power supply the bottom display shows "**rtC**" alternated to a temperature or pressure value, **It is necessary to set the RTC (Real time clock).**
The internal clock is an option of the instrument and it is not possible to update it.
It is necessary to order the instrument already complete of this features.
If the instrument is disconnected to the power supply for more than 3 days, it is necessary to setup the clock.

8.2 RTC SETUP

1. Push **Menu** key continuously for 3 seconds until the bottom display shows **"Hour**" and the top display shows its value.
2. Push **SET** one time: the value is blinking.
3. Use the Up and Down keys to adjust it. Push **SET** one time to confirm.
4. Push up or down keys and repeat the operations 2. 3. and 4. for all the RTC parameters:

- **Min:** minutes (0÷60)
- **UdAy:** day of the week **(Sun** = Sunday, **Mon** =Monday, **tuE** =Tuesday, **UEd** = Wednesday, **tHu** = Thursday, **Fri** =Friday, **SAt** =Saturday)
- **dAy:** day of the month (0÷31)
- **MntH:** month (1÷12)
- **yEAr:** year (00÷99)

9. PARAMETERS PROGRAMMING WITH THE "HOT KEY 64"

9.1 HOW TO PROGRAM AN INSTRUMENT WITH AN ALREADY PROGRAMMED "HOT KEY" (DOWNLOAD)

1. Power off the instrument
2. Insert the hot key already programmed (by software Wizmate or other instrument)
3. Power on the instrument
4. Automatically the parameters are downloaded

During the download the regulation is locked and the top display shows the "**doL**" blinking label. At the end of the download will appear:
"End" if the programming procedure is completely OK, after 30seconds the regulation starts automatically.
"Err" if the programming procedure has found an error and the parameter have not been transferred. In this case turn off and then on the instrument supply to repeat the operation or remove the hot key, with power supply off, to restart the regulation.

9.2 HOW TO COPY THE PARAMETER MAP INTO THE "HOT KEY" (UPLOAD)

1. Power on the instrument
2. Insert the hot key
3. Enter the function Menu
4. Select the **UPL** function (on the bottom display)
5. Push **SET** key and immediately the instrument starts transfer the parameters into the Hot key.

During the upload the regulation is locked and the top display shows the "**UPL**" blinking label. At the end of the UPLOAD will appear:
"End" if the programming procedure is completely OK, after 30seconds the regulation starts automatically.
"Err" if the programming procedure has found an error and the parameter have not been transferred. Repeat the procedure.
To exit the UPL function push the MENU key or wait the time-out (15 sec).

10. PROGRAMMING USING THE KEYBOARD

Though the keyboard it is possible to modify the values of the parameters and set for each one of them the visibility and editability; each parameter can be made visible at different levels of users:

- Pr1 User level (default Password = 1)
- Pr2 Maintenance level (default Password = 2)
- Pr3 OEM level (default Password = 3)

10.1 ENTER THE PROGRAMMING LEVEL PR1

Enter the Pr1 "User level":

1. Push **SET** + **DOWN** keys together for 3 seconds. The top display shows "PAS" and the bottom display shows "Pr1".
2. Push **SET** key and the top display shows "0" blinking
3. Push **UP** or **DOWN** to select Pr1 password
4. Push **SET** and, if the value is correct, the top display shows the first family of parameters **"ALL"**
5. Push **UP** or **DOWN** to select the parameter family
6. Push **SET** to enter; the bottom display shows the first available parameter while the top display shows its value.
7. Push **UP** or **DOWN** to modify its value
8. Push **SET** to confirm the new value
9. If necessary modify others parameter
10. Push **SET** + **UP** keys together to exit parameters programming

10.2 ENTER THE PROGRAMMING LEVEL PR2

Enter the Pr2 "service level":

1. Push **SET** + **DOWN** keys together for 3 seconds. The top display shows "PAS" and the bottom display shows "Pr1"
2. Push **UP** key for 2 seconds and the top display will show Pr2
3. Push **SET** key and the top display shows "0" blinking
4. Push **UP** or **DOWN** to select Pr2 password
5. Push **SET** and, if the value is correct, the top display shows the first family of parameters **"ALL"**
6. Push **UP** or **DOWN** to select the parameter family
7. Push **SET** to enter, the bottom display shows the first available parameter label while the top display shows its value
8. Push **UP** or **DOWN** to modify its value
9. Push **SET** to confirm the new value
10. If necessary modify others parameter
11. Push **SET** + **UP** keys together to exit parameters programming

10.3 ENTER THE PROGRAMMING LEVEL PR3

Enter Pr3 "OEM level ":

1. Push **SET + DOWN** keys together for 3 seconds. The top display shows PAS and the bottom display shows Pr1
2. Push **UP** key for 2 seconds and the top display shows Pr2
3. Push **UP** key again for 2 seconds and the top display will show Pr3

4. Push **SET** key and the top display shows “0” blinking
5. Push **UP** or **DOWN** to select Pr3 password
6. Push **SET** and, if the value is correct, the top display shows the first family of parameters **“ALL”**
7. Push **UP** or **DOWN** to select the parameter family
8. Push **SET** to enter; the bottom display shows the first available parameter label while the top display shows its value
9. Push **UP** or **DOWN** to modify its value
10. Push **SET** to confirm the new value
11. If necessary modify others parameter
12. Push **SET** + **UP** keys together to exit parameters programming

11. MENU (MENU KEY)

Enter the menu:
• press the menu button;
• press the UP or DOWN button to select the submenu;
• press the SET to enter the submenu.

Exit menu functions:
• Press the menu button or wait the time-out.

Entering the menu, it is possbile to:
1. Read and reset the alarms (**ALrM)**
2. Read and reset the alarm log (**ALOG)**
3. Upload the parameter into the Hot Key (**UPL)**
4. Enable – disable a gas circuit (**CrEn)**
5. Enable – disable a compressors (**COEn)**
6. Read and reset the number of compressor running hour (**Hour)**
7. Read and reset the number of compressor starts-up (**COSn)**
8. Read dynamic set point probe value (**PbdS**)
9. Read compressor discharge temperature (**COdt)**
10. Read condensing fan speed percentage of the proportional output (**Cond)**
11. Read the percentage of the proportional output 0 ÷ 10 Vdc **Pout**
12. Enable – disable one of the pumps **POEn**
13. Read the delay time between two defrost cycles (**dF)**
14. Read auxiliary output probe value (**uS)**
15. Read the temperature measured by internal sensor of the remote keyboards **(trEM)**
16. Read the temperature, the set point and the output status of the Free cooling **(FC)**
17. Read the temperature, the set point and the output status of the Solar panel **(SoL)**
18. Read temperature, pressure and status of the electronic expansion valve 1 **(Et1)**
19. Read temperature, pressure and status of the electronic expansion valve 2 **(Et2)**

11.1 ALARM LIST: READ AND RESET

ALrM FUNCTION

1. Push MENU key
2. The display shows AlrM label
3. Push **SET** key (Nothing happens if there are not alarms)
4. The bottom display shows the alarm code and the top display shows the label **rSt,** if it is possible to reset the alarm, or **NO** if it is not possible to reset the alarm
5. Push **UP** or **DOWN** to scroll the alarm list (if more than one alarm is active)
6. Repeat the reset procedure for each alarm
7. To exit the ALrM reset, push MENU or wait the timeout.

11.2 ALARM LOG LIST

ALOG FUNCTION

1. Push MENU key
2. Push **UP** or **DOWN** to select ALOG
3. Push SET key
4. The bottom display shows the alarm label, the top display shows a number in the range 00 to 99.
5. Use the UP or DOWN keys to scroll the list.
6. To exit the ALOG function push MENU or wait the timeout.

Erase the Alarm log list

1. Push MENU key
2. Push **UP** or **DOWN** to select ALOG
3. Push the **SET** key
4. Push **UP** or **DOWN** keys and search the **ArSt** label on the bottom display; the top display shows PAS.
5. Push **SET**; the bottom display shows **PAS** and the top display shows “0” blinking
6. Push **UP** or **DOWN** to set the password
7. If the password is OK the label **ArST** blinks for 5 seconds then the display returns to normal condition read-out
8. If the password is not correct the display shows **PAS** again
9. To exit, push the MENU key or wait the timeout.

The standard password to reset the alarm log is “4”.

12. REMOTE KEYBOARD VI622 AND TI620

The display visualization and the button functions are the same of the Ichill, then refer to previous chapters of the quick reference guide.

13. REMOTE KEYBOARD V2I820

La schermata principale visualizza le temperature/pressioni misurate dalle principali sonde della macchina;
sono presenti delle icone che segnalano l'attivazione dei carichi principali (compressori, pompe dell'acqua, ventole, resistenze), di stati macchina (produzione di acqua calda sanitaria, sbrinamento, unloading, energy saving ed allarme):

- stato unità: indicazione dello stato ON o OFF della macchina e della modalità di funzionamento (raffrescamento, riscaldamento, …….)
- ora e data, disponibili se l'Ichill 200D è provvisto di orologio a bordo
- il valore di 4 sonde configurabili a piacere, tra quelle presenti nel controllore, tramite l'opportuna programmazione dei parametri dP06..dP09
- lo stato dei carichi e delle funzioni come da tabella sotto:

The main window shows the temperature / pressure measured by the main probe of the machine.
Some icons indicate the activation of the main loads (compressors, water pumps, fans, heaters), the status of the machine (production of hot water, defrost, unloading, energy

saving and alarm):

- unit status: ON/OFF status and operating mode (cooling, heating, ...)
- time and date, if the iCHILL 200D is equipped with on-board clock
- the value of 4 sensors can be configured as desired through the parameters dP06..dP09
- the load status

	Compressor/s (blinking during the start up delay)		Economy function
/	Water pump / Supply fan		Unloading function
	Condenser fan		Economy or ON/OFF by timetable
	Electric heater		Defrost
	Domestic hot water		Alarm
	Recovery enabled		

Meaning of the keys:

PROBES	Allows to read the value of the probes configured in the Ichill	SET	Allows to read/modify the set point
	Allows to switch on the Ichill in heating or cooling mode (see parameter CF78)	ALARM	Allows to read the alarms
	Allows to switch on the Ichill in heating or cooling mode (see parameter CF78)	SERVICE	Allows to enter the SERVICE menù
	Allows to put the Ichill in STD-BY	CIRC.	Allows to read the main information of the circuits (compressor status, water pump status, pressure probe value,…)

Note:
in case of alarm, press any key to silence the buzzer.

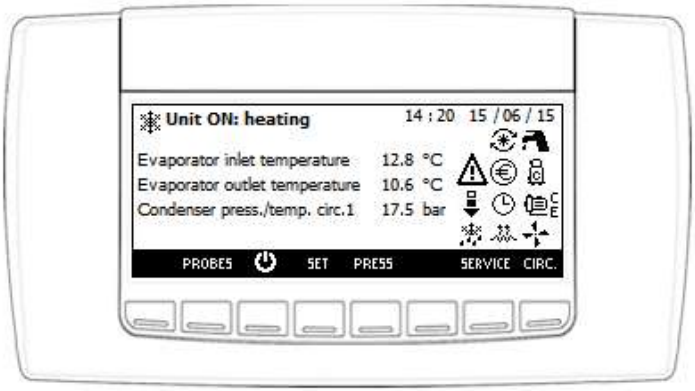

13.1 PROBES VISUALIZATION

Press PROBES key to visualize the value of the probes configured in the Ichill and I/O expansion (press ▲ or ▼ to visualize all the probes).

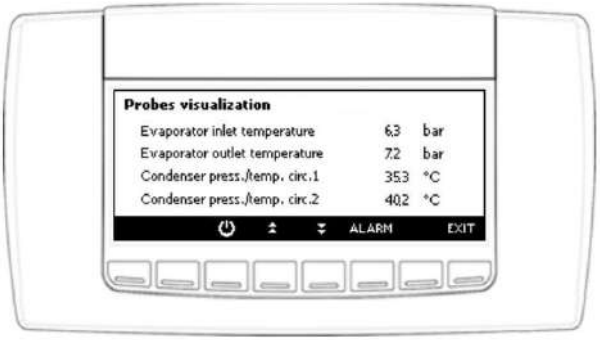

13.2 SET POINT VISUALIZATION / MODIFICATION

Press SET key to read the value of the set point (cooling set point if the Ichill is in cooling mode, heating set point if the Ichill is in heating mode, cooling and hating set point if the Ichill is in STD_BY or remote OFF, Domestic hot water when enabled).
It is also possible to read the status of the Energy saving, the status of the Dynamic set point and the real value of the set point if the Energy saving or Dinamic set point are active.

To modify the set point (Cooling, Heating or Domestic hot water):

- press ▲ or ▼ to select the value of the set point
- press SET
- press ▲ o ▼ to modify the value
- press SET to confirm the operation

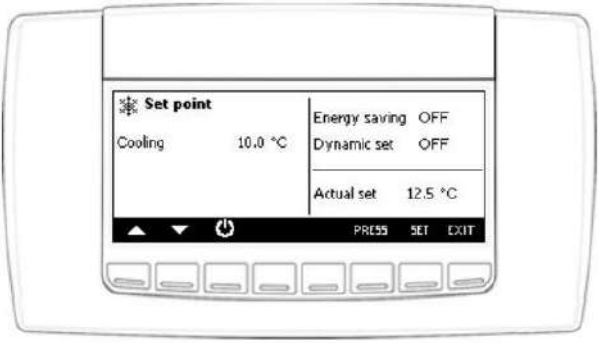

13.3 ALARM VISUALIZATION

Press ALARM key to read the alarm status; the alarm status can be:

- **Active**: the alarm is still active and it is not possible to reset it
- **Reset**: the alarm is not active and it is possible to reset it

Manual reset procedure:

- press ▲ or ▼ to select the alarm;
- press RESET to reset the alarm

In case of compressor overload alarm when the password is requested, follow this step:

- press ▲ o ▼ to select the compressor overload alarm

- press RESET
- press SET
- press ▲ or ▼ to insert the password value (parameter AL46)
- press SET to confirm the operation

Note:
in caso of alarm, first key pressure silence internal buzzer (if enabled).

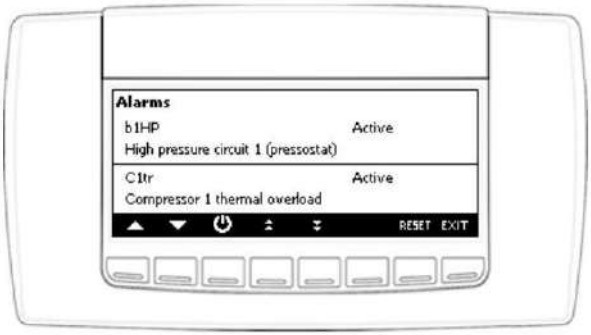

14. TABLE OF THE OUTPUT STATUS IN ALARM CONDITION

14.1 ALARM: "A" TYPE AND STATUS OF THE LOADS IN CASE OF ALARM

Alarm Code	Alarm description	Compressor	Anti freeze heaters Boiler	Support heaters	Evap. Pump. Supply fan	Condenser Pump	Ventilaz. cond. Cir1 Cir2	Auxiliary relay
ACF1 .. ACF12	Configuration alarm	OFF	OFF	OFF	OFF	OFF	OFF	OFF
ACFL	Condenser flow alarm	OFF				OFF **(3)**	OFF	
AEE	Eeprom alarm	OFF	OFF	OFF	OFF	OFF	OFF	OFF
AEFL	Evaporator flow alarm	OFF	OFF (boiler)		OFF **(3)**		OFF	

AEht	High water temperature inlat evaporator	OFF						
AELt	Low temperature of the evaporator inlet in Heat Pump mode	OFF						
AHFL	Domestic hot water pump flow alarm	OFF **(6)**	/	/	/	/	/	/
ALc1	Generic alarm n°1	OFF			OFF	OFF	OFF	OFF
ALc2	Generic alarm n°2 and AL56=0							
ALSF	Phase sequence alarm	OFF	OFF	OFF	OFF	OFF	OFF	OFF
ALti	Low air temperature of the evaporator inlet (air / air unit) Alarm							
Ap1 .. Ap6	Probe failure	**(7)**	Yes **(6)**	**(7)**	**(7)**	**(7)**	**(7)**	Spento **(2)**
APE1 ... APE8	I/O expansion probes	**(7)**	**(7)**	**(7)**	**(7)**	**(7)**	**(7)**	**(7)**
APFL	Solar panel water pump flow alarm	/	/	/	/	/	/	/
APt1 APt2	Remote terminals probe	**(7)**	**(7)**	**(7)**	**(7)**	**(7)**	**(7)**	**(7)**
APU1 ... APU4	IEV Electronic expansion valve probes	**(8)**	**(8)**	**(8)**	**(8)**	**(8)**	**(8)**	**(8)**
ASLA	Serial communication failure with I/O expansion	OFF	OFF	OFF	OFF	OFF	OFF	OFF
ASun	Solar panel water pump maintenance	/	/	/	/	/	/	/
AtAS	Domestic hot water pump overload	OFF **(6)**	/	/	/	/	/	/
AtC1	Condenser	OFF **(4)**				OFF	OFF	

	water pump 1 overload alarm							
AtC2	Condenser water pump 2 overload alarm	OFF **(4)**				OFF	OFF	
AtE1	Evaporator water pump 1 overload alarm	OFF **(4)**	OFF (boiler) **(5)**		OFF		OFF	
AtE2	Evaporator water pump 2 overload alarm	OFF **(4)**	OFF (boiler) **(5)**		OFF		OFF	
AtHS	Domestic hot heater overload	/	/	/	/	/	/	/
AtSF	Supply fan overload alarm	OFF		OFF	OFF		OFF	
AUAL	Serial communication failure with expansion valve driver	OFF	OFF	OFF	OFF	OFF	OFF	OFF
Err	Contemporary activation of cooling and heating request on condensing unit	OFF	OFF	OFF	OFF	OFF	OFF	OFF

(1) = if probe configured as anti-freeze / boiler control and Ar10 = 0
(2) = if probe configured to control the auxiliary output
(3) = if the alarm is manual reset
(4) = compressors off if only 1 water pump configured or if 2 water pumps and both in alarm
(5) = boiler heaters off if only 1 water pump configured or if 2 water pumps and both in alarm (in this case boiler heaters are used only for anti-freeze)
(6) = if enabled the only domestic hot water function, or if the chiller and heat pump set point are reached
(7) = load switching off depends on the probe on error; regulation probe alarm switch off main loads, external probe alarm disable only dynamic set point function
(8) = in case of electronic expansion valve probe alarm, all the loads of gas circuits where the valve is mounted are switched off

14.2 ALARM: “B” TYPE AND STATUS OF THE LOADS IN CASE OF ALARM

Alarm Code	Alarm description	Compressors of the circuit (*n*)	Compressors of the other circuit	Fan condensing of the circuit (*n*)	Fan condensing of the other circuit
b(*n*)AC	Anti-freeze in chiller circuit **(*n*)**	OFF		OFF	
b(*n*)Ac	Anti-freeze circuit **(n)** warning in chiller				
b(*n*)AH	Anti-freeze in heat pump circuit **(*n*)**	OFF		OFF	
b(*n*)Ah	Anti-freeze circuit **(n)** warning in heat pump				
b(*n*)dF	End defrost warning circuit **(*n*)**				
b(*n*)ds	Circuit **(n)** disabled from keyboard	OFF		OFF	
b(*n*)Eu	Unloading from evaporator low temp/press of the circuit **(*n*)**	OFF		OFF	
b(*n*)HP	High pressure switch circuit **(*n*)**	OFF		OFF after 60 seconds	
b(*n*)hP	High condensing pressure of the circuit **(*n*)**	OFF		OFF after 60 seconds	
b(*n*)hP	High condensing temperature from NTC of the circuit **(*n*)**	OFF		OFF after 60 seconds	
b(*n*)LP	Low pressure switch circuit **(*n*)**	OFF		OFF	
b(*n*)LP	Low condensing pressure - (evaporating with low pressure transducer) with transducer of the circuit of the **(*n*)**	OFF		OFF	
b(*n*)lP	Low condensing temperature NTC circuit **(*n*)**	OFF		OFF	
b(*n*)PH	Pump down alarm in stop regulation of the circuit **(*n*)**	OFF		OFF	
b(*n*)PL	Pump down in regulation start-up of the circuit **(*n*)**	OFF		OFF	
b(*n*)rC	Recovery function disabled in circuit **(n)**				
b(*n*)tF	Fan overload circuit **(*n*)**	OFF		OFF	
b(*n*)UA	IEV electronic expansion valve driver alarm circuit **(*n*)**	OFF	/	OFF	/

(*n*) identifies the circuit 1 or 2

14.3 ALARM: “C” TYPE AND STATUS OF THE LOADS IN CASE OF ALARM

Alarm Code	Alarm description	Compressor (*n*)	Compressors not involved
C(*n*)dS	Compressor (n) disabled from keyboard	OFF	
C(*n*)dt	Compressor high discharge temperature	OFF	
C(*n*)HP	Compressor(*n*) high pressure switch	OFF	
C(*n*)Mn	Compressor(*n*) maintenance		
C(*n*)oP	Compressor(*n*) oil pressure switch / Oil level switch	OFF	
C(*n*)tr	Compressor(*n*) overload	OFF	

(*n*) identifies the compressor 1, 2 , 3 , 4

14.4 WARNING

Alarm Code	**Alarm description**
ACP1	Condenser water pump 1 maintenance
ACP2	Condenser water pump 2 maintenance
AEP1	Evaporator water pump 1 maintenance
AEP2	Evaporator water pump 2 maintenance
AEUn	Unloading caused by evaporator high temp.
ArtC	Clock setting
ArtF	Clock failure
ASAn	Domestic hot water pump maintenance
Atr1	Remote terminal n° 1 configured but not connected
Atr2	Remote terminal n° 2 configured but not connected
b(*n*)Cu	Unloading caused by condenser high temp/press circuit **(*n*)**
b(*n*)Eu	Unloading from evaporator low temp/press of the circuit **(*n*)**
noL	Communication problem with Ichill and remote keyboard

15. BLACK-OUT

After the black-out, when the power supply is restored:

1. the instrument restores the same operating mode lost after the supply failure.
2. if active at the power off, the defrost is aborted
3. All the timers are reloaded
4. The alarm, if actives in manual mode at the power down, is not reset

16. WIRING CONNECTIONS

16.1 IC205D CONNECTIONS

- 5 x digital outputs (relays)
  Max current on the relay contacts relè 5(2)A 250V
  Max current on common line 10A 250V
- 9 x digital inputs (free of voltage)
- 8 x analogue inputs:
  - 5 x NTC preobe / PTC probe / digital input
  - 3 x NTC preobe / PTC probe / digital input / pressure transducer 4÷20 mA / pressure transducer ratio-metric 0÷ 5.0 Volt
- 4 modulating outputs:
  - 1 x 0 ÷ 10 Volt
  - 2 x 0 ÷ 10.0 Volt or PWM (for modulating condenser fan)
- 1 x output to connect a remote keyboard (max 2 remote keyboards)
- 1 x LAN to connect an I/O expansion module (ICX207D)
- 1 x TTL output for “HotKey 64” (for parameters programming) or for XJ485CX (interface module for monitoring system)
- 1 x RS485 output to connect the instrument to a RS485 network (monitoring system) or XWEB system.

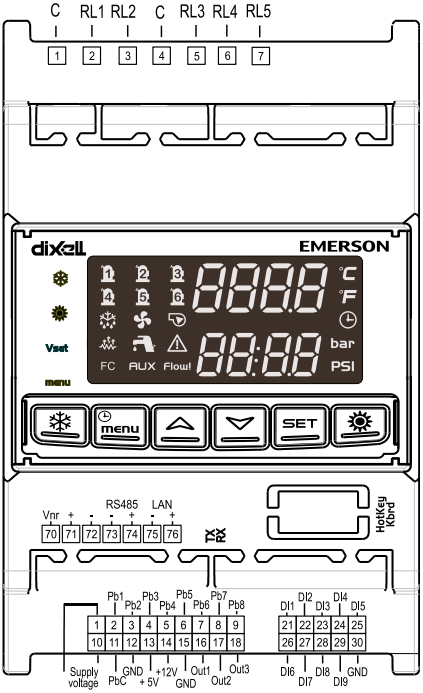

16.2 207D CONNECTIONS

- 7 x digital outputs (relays)
  Max current on the relay contacts relè 5(2)A 250V
  Max current on common line 10A 250V
- 9 x digital inputs (free of voltage)
- 8 analogue inputs:
  - 5 x NTC preobe / PTC probe / digital input
  - 3 x NTC preobe / PTC probe / digital input / pressure transducer 4÷20 mA / pressure transducer ratio-metric 0÷ 5.0 Volt
- 4 x modulating outputs:
  - 1 x 0 ÷ 10 Volt
  - 2 x 0 ÷ 10.0 Volt or PWM (for modulating condenser fan)
- 1 x output to connect a remote keyboard (max 2 remote keyboards)
- 1 x LAN to connect an I/O expansion module (ICX207D)
- 1 x TTL output for “HotKey 64” (for parameters programming) or for XJ485CX (interface module for monitoring system)
- 1 x RS485 output to connect the instrument to a RS485 network (monitoring system) or XWEB system.

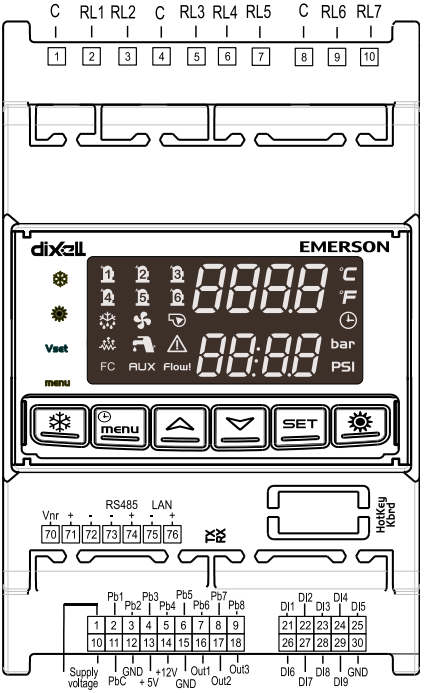

16.3 REMOTE KEYBOARD CONNECTION

It is possible to connect to the instrument up to two remote terminals VI622, available with / without temperature probe on board, or two TI620 available without temperature probe on board, or an LCD keyboard Visograph 2.0 (V2I820 without probes on board).; the use of keyboards VI622 or TI620 excludes the possibility of use of the keyboard Visograph and vice versa.
If the remote terminal VI622 is provided with temperature sensor on board, the temperature adjustment can be performed with the probe at the edge of the terminal.
To enable the remote keyboard is necessary to configure the following parameters (in the Ichill parameter map):
• CF54 Enable remote terminal 1 (VI622 EVO, TI620)
• CF55 Enable remote terminal 2 (VI622 EVO, TI620)
• CF84 Enable remote terminal Visograph (V2I820)
The connection of the remote terminals must be performed using a shielded / twisted (such as Belden 8772, wires 1 mm^2 minimum); the maximum distance is 100M (maximum length of the connection, both if using one or two keyboards).
In case of lack of communication between the device and the keyboard (wrong connection, wrong configuration parameters), the display shows the message "noL" (no link).
When using two keyboards VI622 you must configure the dip switches on the rear of the same, giving to the first keyboard address 1 and to the second keyboard address 2.

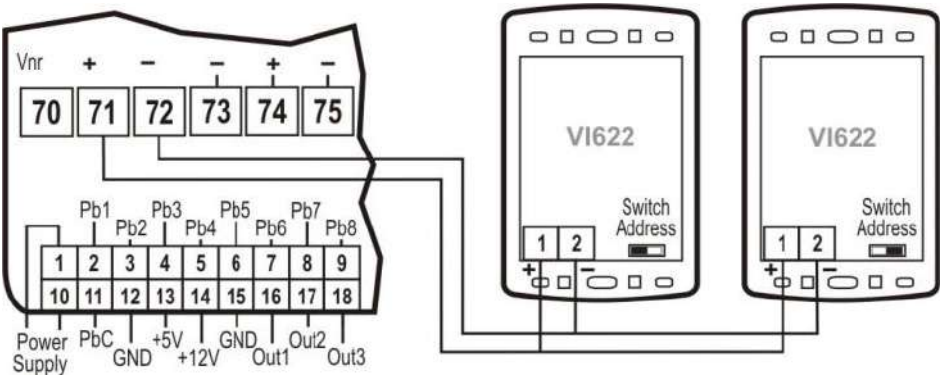

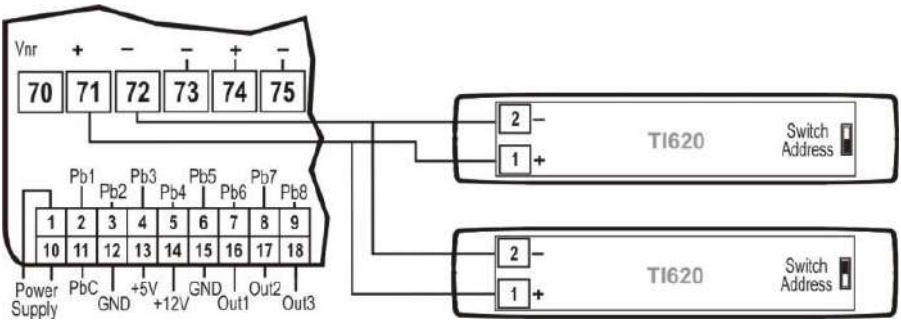
Vnr
+
−
−
+
−
70
71
72
73
74
75
Pb1
Pb2
Pb3
Pb4
Pb5
Pb6
Pb7
Pb8
1 2 3 4 5 6 7 8 9
10 11 12 13 14 15 16 17 18
Power Supply
PbC
GND
+5V
+12V
GND
Out1
Out2
Out3
2 −
1 +
TI620
Switch Address
2 −
1 +
TI620
Switch Address

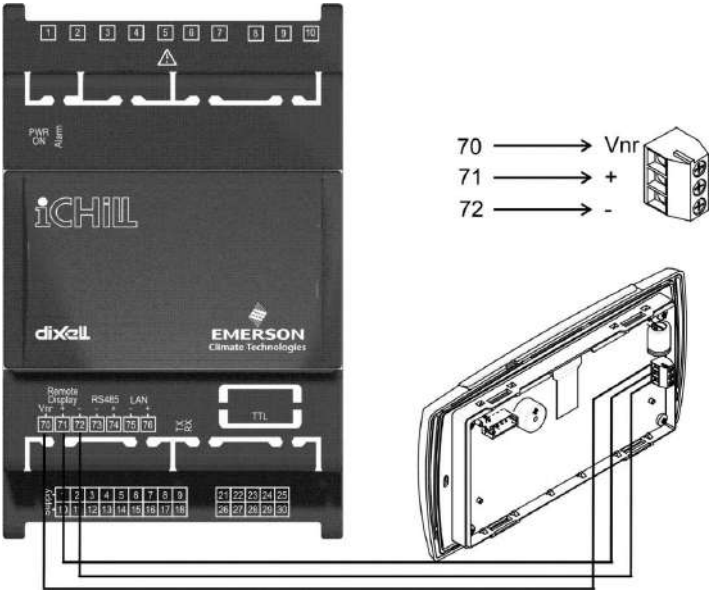
PWR ON
Alarm
iCHILL
dixell
EMERSON
Climate Technologies
Remote Display
RS485
LAN
Vnr
TTL
TX RX
DISPLAY
70 → Vnr
71 → +
72 → -

16.4 ANALOG INPUTS NTC – PTC PROBES

PbC = common terminal
Pb1…Pb6 = probe inputs

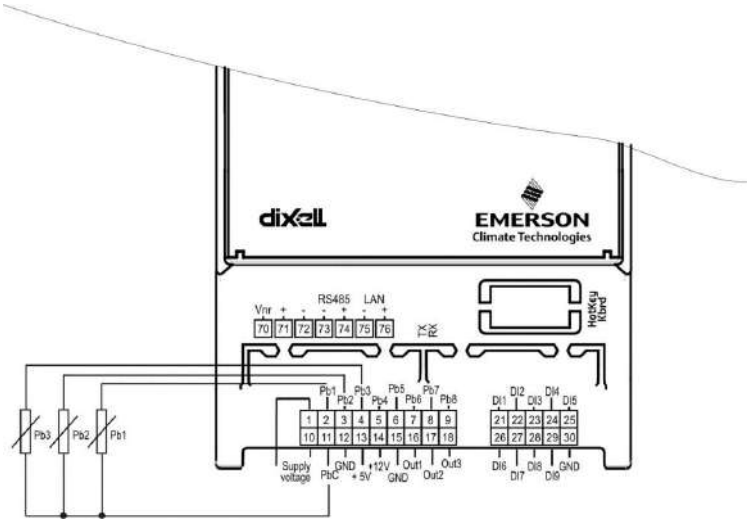

16.5 DIGITAL INPUTS

GND = common terminal
ID1…ID11 = digital inputs

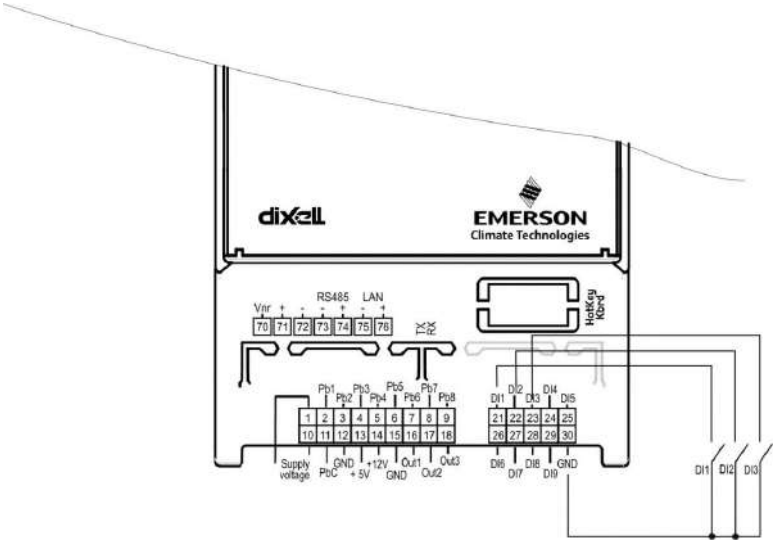

16.6 ANALOG INPUT FOR PRESSURE TRANSDUCER (4 ÷ 20MA SIGNAL)

12V = power supply for pressure transducers
Pb3 and Pb4 = pressure transducer inputs

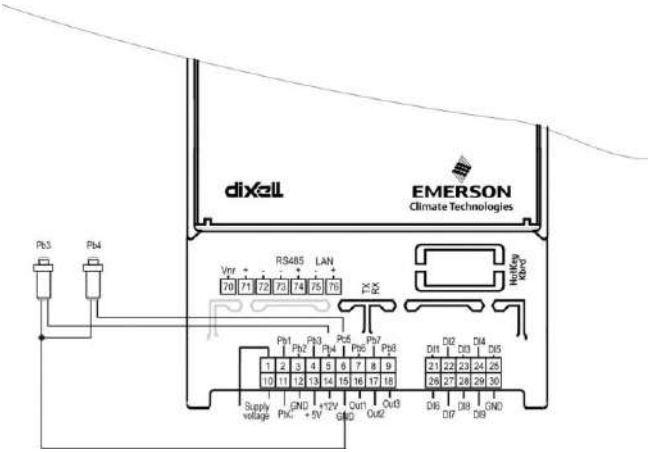

16.7 ANALOG INPUT FOR PRESSURE RATIOMETRIC TRANSDUCER PPR30 (0 ÷ 5V SIGNAL)

+5V = power supply for pressure transducers
GND = ground for pressure transducers
Pb3 and Pb4 = pressure transducer inputs

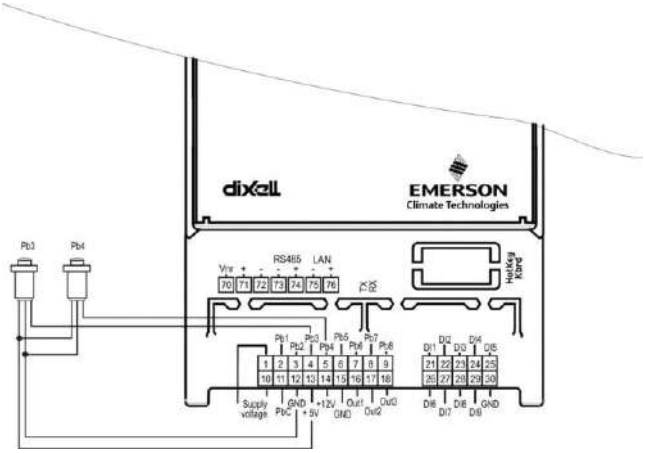

16.8 PWM OUTPUT FOR CONDENSING FAN SPEED CONTROL (ONLY FOR OUT2 AND OUT3)

The compatible modules are the following:
XV05PK mono-phase 500 Watt (2A)
XV10PK mono-phase 1000 Watt (4A)
XV22PK mono-phase 2200 Watt (9A)

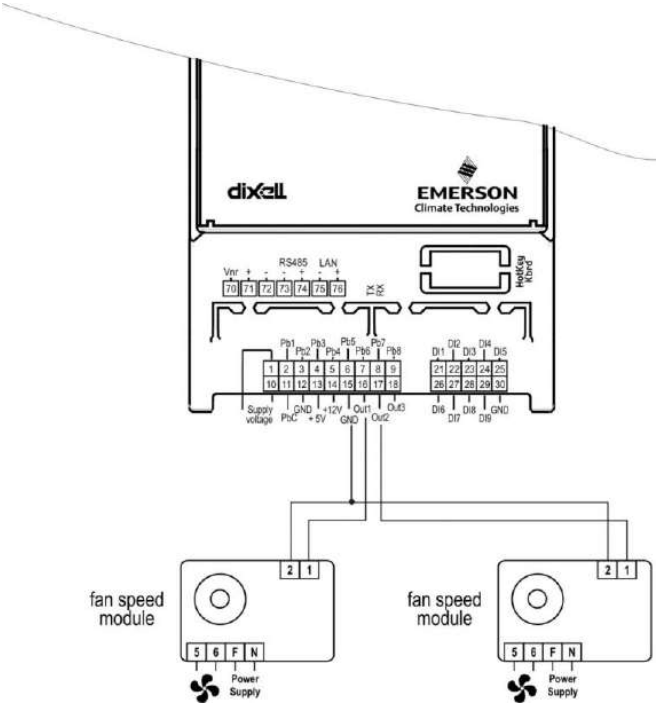

16.9 PROPORTIONAL OUTPUT FOR FAN CONDENSING CONTROL OR FOR COMPRESSOR INVERTER CONTROLLED OR FOR AUXILIARY OUTPUTS

OUT1…OUT4 = signals for the modulation of the condenser fan
GND = ground for pressure transducers

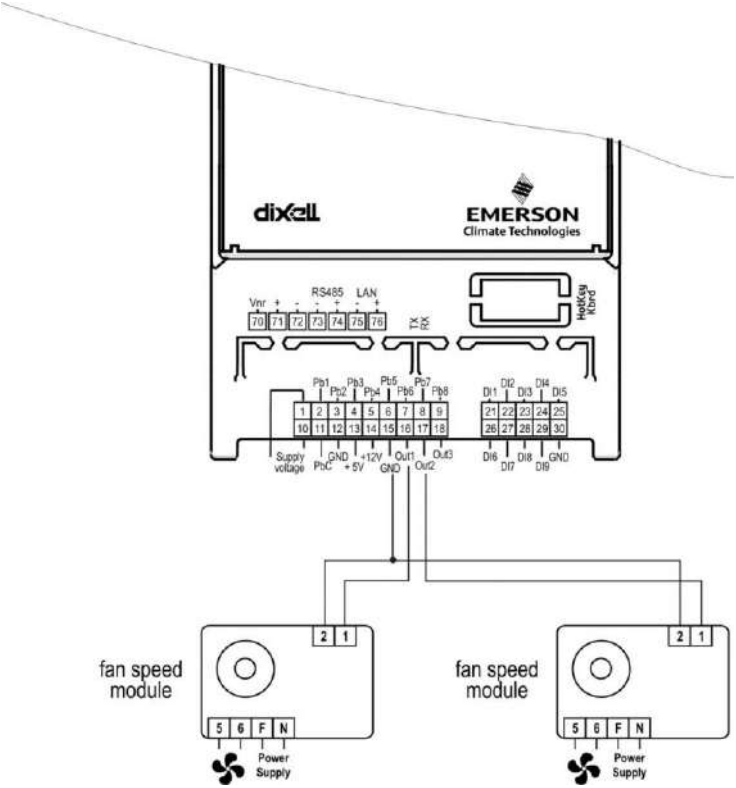

16.10 PROPORTIONAL OUTPUT 0..10V TO CONTROL DUMPER MOTORS

OUT1…OUT4 = signals for the modulation of the dumper motor
GND = ground

GND = comune
OUT1..OUT3 = analog output

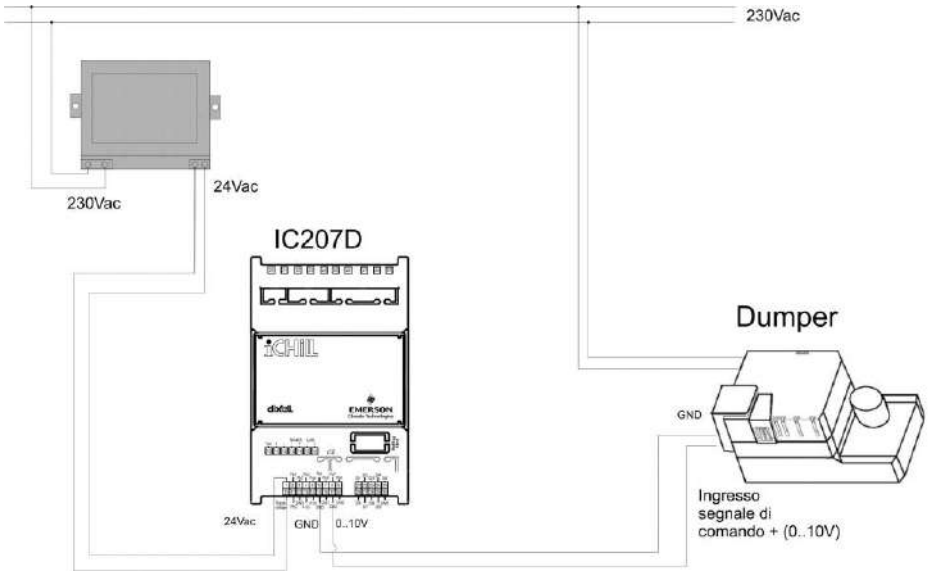

If the dumper motor has a common line between a pole of the power supply and the "–" pole of the 0..10V signal, it is necessary to use two transformers for the power supply of the controller Ichill and the power supply of the dumper motor.

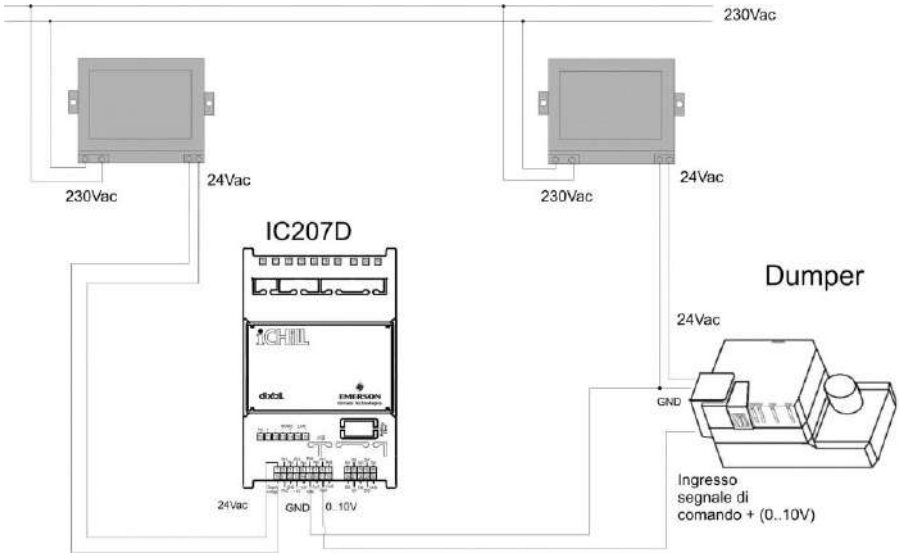
230Vac
230Vac
24Vac
230Vac
24Vac
IC207D
Dumper
24Vac
GND
24Vac
GND
0..10V
Ingresso
segnale di
comando + (0..10V)

16.11 PROPORTIONAL OUTPUTS CONFIGURED FOR AUX RELAY CONTROL

OUT1…OUT4 = signals for relays
GND = ground

Max. current to drive the relay coil: 40mA.
Power supply of the relay: 12Vcc.

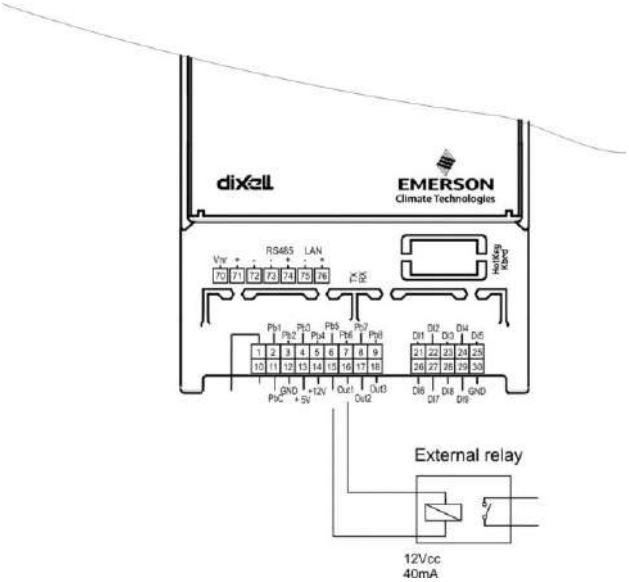

17. INSTALLING AND MOUNTING

17.1 MECHANICAL DIMENSIONS

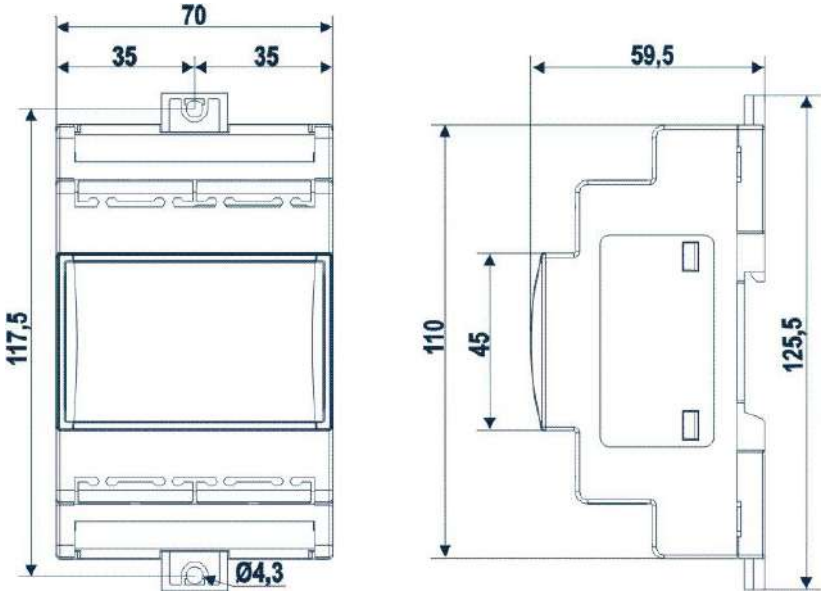

Mount:	DIN rail (EN 50022, DIN 43880)
Material:	PC-ABS Thermoplastic
Self-extinguishing:	V0 (UL94)
Comparative Tracking Index (CTI):	300V
Colour:	Black
IP protection:	IP10

17.2 VI622 PANEL CUT-OUT

The keyboard must be mounted on vertical panel with cut-out 72x56 mm, and screwed with two screws.
The IP65 can be reached with the gasket RGW-V (optional).

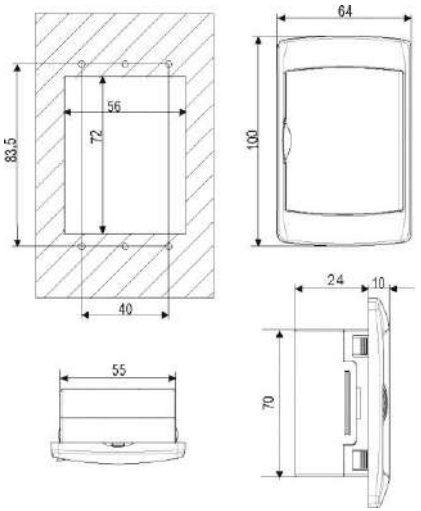

WALL MOUNTING: use the vertical V-KIT (black, white and grey) as described in the following scheme:

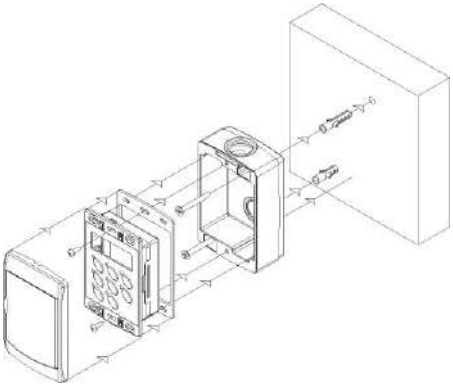

17.3 TI620 PANEL CUT-OUT

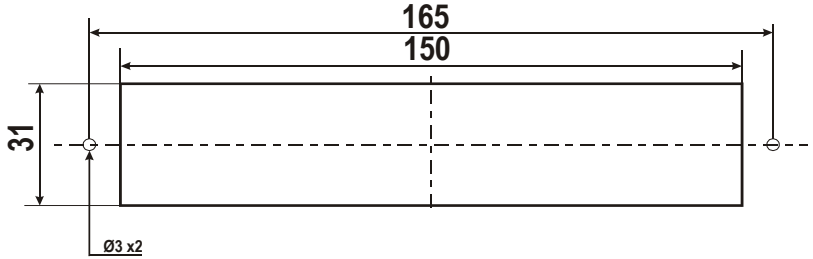

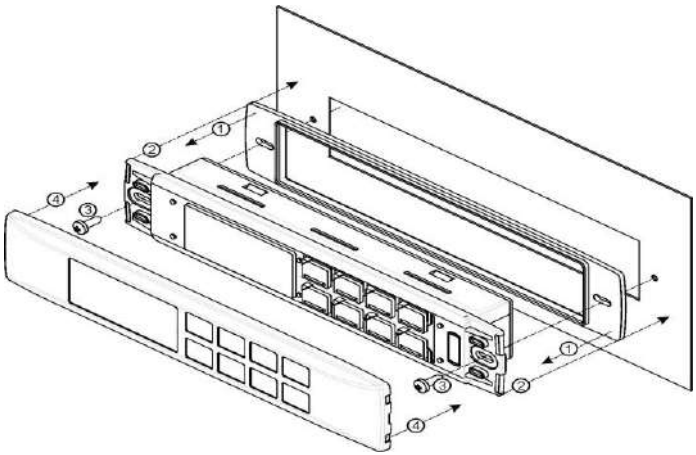

17.4 V2I820 PANEL CUT-OUT

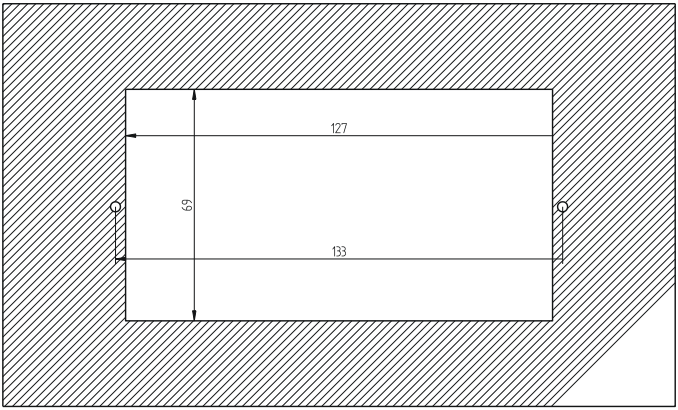

18. TECHNICAL SPECIFICATIONS

18.1 SUPPLY VOLTAGE

Power Supply:	12Vac/dc -10% ÷ 15%, 50/60Hz, or 24Vac/dc -10% ÷ 10%, 50/60Hz
Consumption:	Max. 10VA
Connectors:	Molex connectors for power supply, probes connection, digital inputs, analog outputs) STELVIO screw connectors for LAN connection STELVIO screw connectors for relay

18.2 ANALOGUE INPUTS

Number of inputs:	5 (NTC, PTC , D.I.) 3 (NTC, PTC, 4..20mA, 0..5V, D.I.)
Type of analogue input: **(configurable via software parameter)**	NTC (-50T110°C; 10KΩ±1% a 25°C) PTC (-50T150°C; 990Ω±1% a 25°C) Rathiometric: 0.5..4.5V Current: 4..20mA Digital input (free contact)
Operation range:	-50°C ÷ 110°C (-58 °F ÷ 230°F) NTC probe -50°C ÷ 150°C (-58 °F ÷ 302°F) PTC probe 0 bar ÷ 50 bar (0 psi ÷ 302 psi) pressure probe

Resolution:	0.1 °C 1 °F 0.1 bar 1 psi

18.3 DIGITAL INPUT

Type: **(configurable via software parameter)**	Free contact not opto-insulated
Number of inputs:	9
Notes: ⚠	Don't supply voltage to the digital inputs in order to not cause damage to the instrument

18.4 ANALOGUE OUTPUTS

Type:	Non opto-insulated, internal power
Number of outputs:	3
Type of analogue output: **(configurable via software parameter)**	3 configurable outputs: - OUT1: 0-10Vdc - OUT2 and OUT 3: • 0-10Vdc • 4-20mA • PWM (to use with Dixell XV serie)
Maximum load:	40mA (Out1..Out4) when connected to an external relay
Accuracy:	Out1..Out3: ±2% full scale
Note: ⚠	The electrical devices controlled by these analogue outputs must be powered separately with another transformer (do not use the same secondary of the controller's power) in order to prevent the outputs from malfunctioning or being damaged.

18.5 DIGITAL OUTPUTS

Type:	Relays with NO contacts
Number of outputs:	5: IC205D model 7: IC207D model
Maximum load:	5A(250Vac) SPST 5(2)A
Note: ⚠	Verify maximum current of the loads and maximum current of the common line of the relay (10A max). There is double insulation between the digital outputs and the low voltage of the rest of the circuit. Do not use different voltages for the various groups of relays nor within each group.

18.6 OPERATING AND STORAGE TEMPERATURE

Operating temperature:	-10°C ÷ 55°C
Storege temperature:	-30°C ÷ 85°C
Operating humidity:	20% ÷ 85% (not condensing)

Dixell

EMERSON
Climate Technologies

Dixell S.r.l. - Z.I. Via dell'Industria, 27 - 32010 Pieve d'Alpago (BL) ITALY
Tel. +39.0437.9833 r.a. - Fax +39.0437.989313 - EmersonClimate.com/Dixell - dixell@emerson.com